TCMW: Band Saw





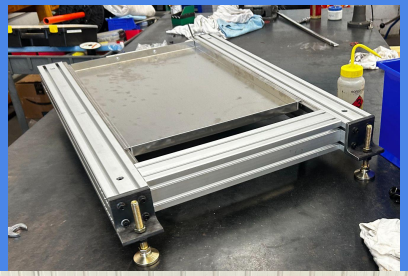



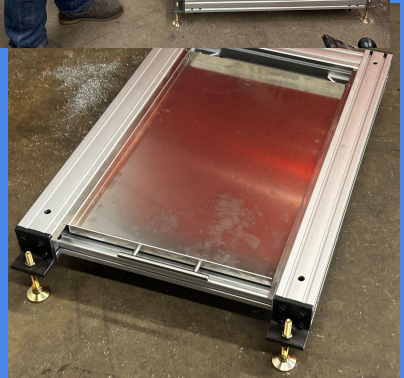

TCMW: Band Saw

Problem:

Working as an engineering intern at Triple Caution Machine Works, I was tasked to fix an old band saw which no longer sat on level ground. The saw would vibrate while it ran, bizarrely increasing kerf on cut pieces.

Design:

First, I copied the bottom of the band saw. I decided to use aluminum T-Rails for their relative cheapness and ease of assembly. I designed a frame in fusion, complete with locking feet held at 90 degree angles by angle iron slabs. I changed the thickness of the T Rails a couple times but decided to go with 3”x3” with a 1.5”x3” in the front to allow access to the underside. I added corner gussets for stability, and designed a custom cut sheet metal tray with a McMaster-Carr handle. I balanced price and still managed to get a wildly durable end result.

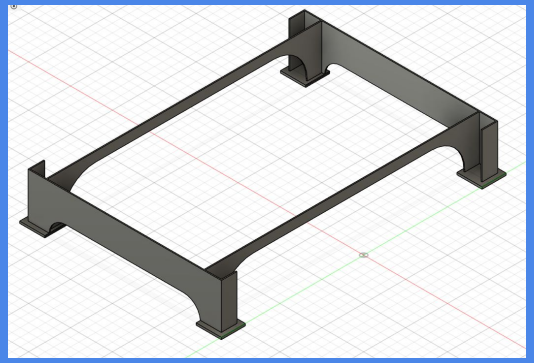

Build Process:

The T-Rails came cut to order. I cut the slabs of angle iron on the very same band saw (it still worked best in the shop-- the reason for improvement was a contract coming up that required insane tolerances.) I drilled the T-rail’s holes on a bridgeport, which was actually really fun I like Bridgeports. I drilled the T-rail’s holes wrong the first time, as I’d gotten wrong my CAD model of the bench saw feet. I was able to fix it and just drill in a different place, but I was very embarrassed. I threaded the T-rails with a tapping arm, and I drilled the angle iron holes and a kind of offset on the Bridgeport.

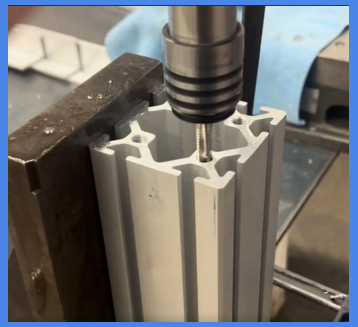

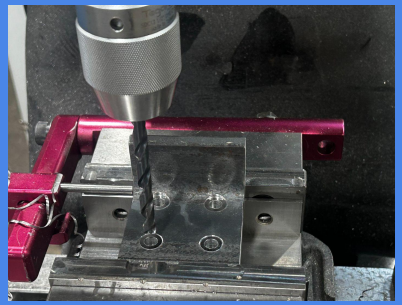

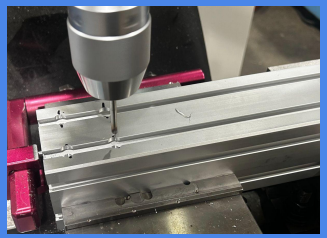

Results/Retrospective:

The frame works great!